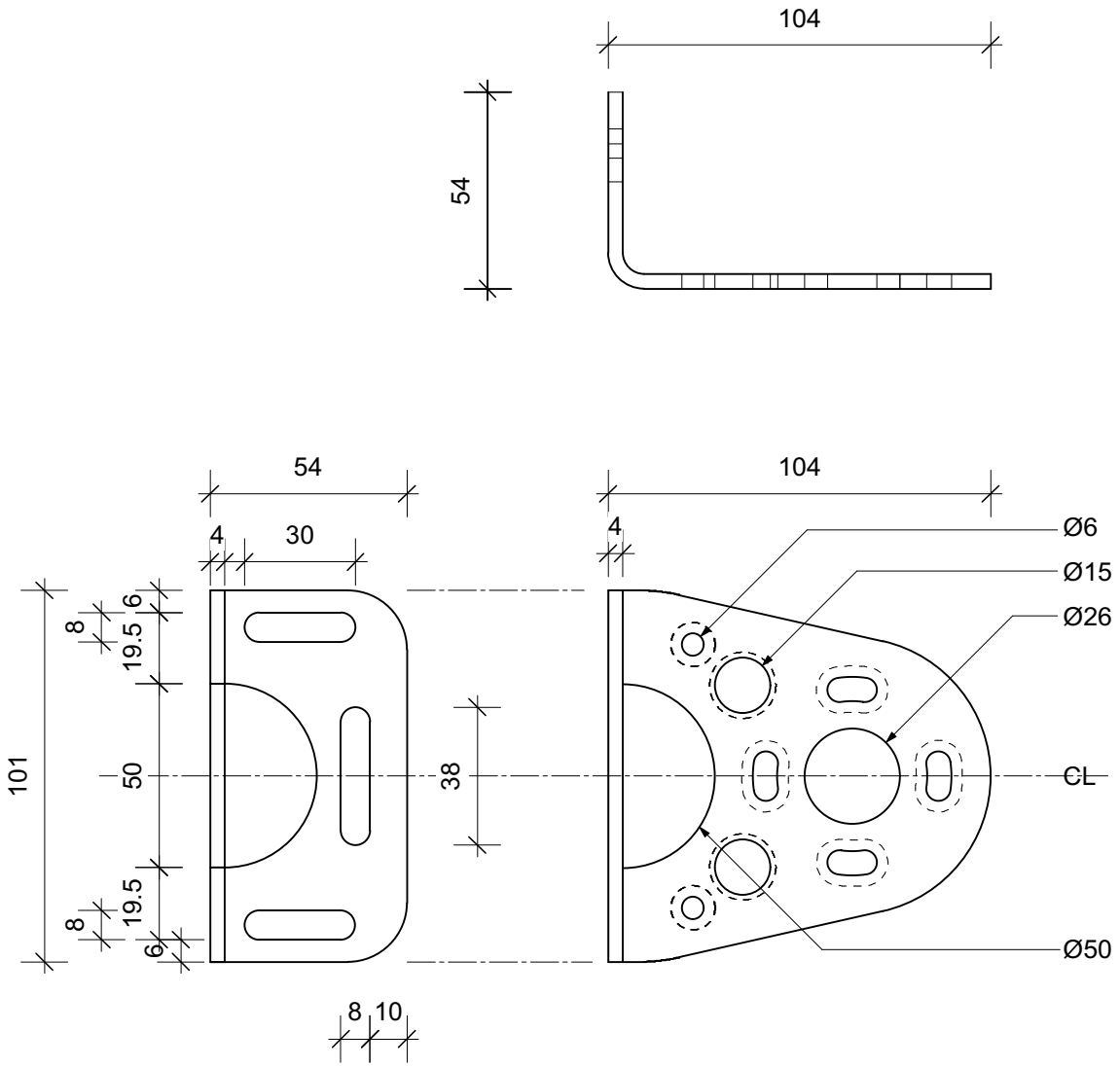

1 CAFE BLIND SS MOUNTING BRACKET - LARGE
- SCALE 1:2 @ A4

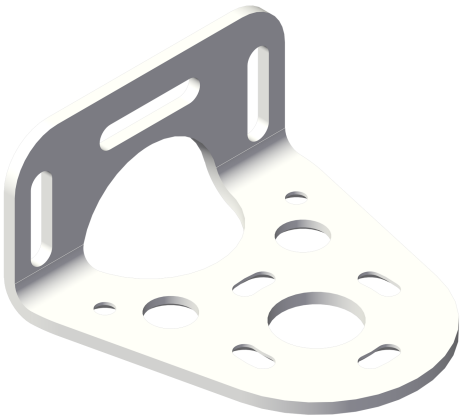

6 MORRIN ROAD PH (09) 570-6353
PANMURE FAX (09) 570-6354
AUCKLAND E-MAIL awnings@coolawnings.co.nz

CoolAwnings